FRIGIDAIRE

Packaged Terminal Air Conditioner (PTAC)

FFRP092LT5

Air Conditioner / Electric Heater

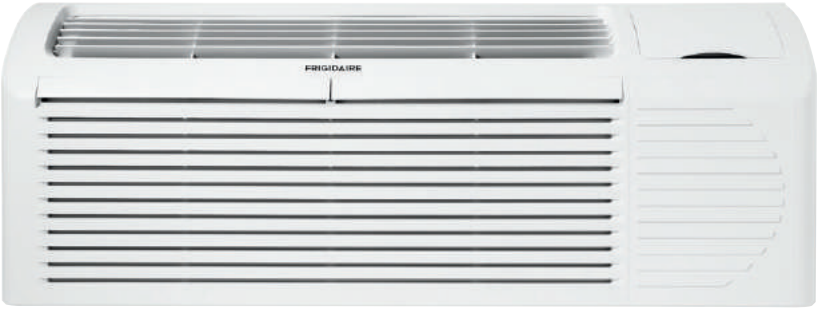

Product Dimensions

Height	16″
Width	42″
Depth	21-3/4″

More Easy-To-Use Features

Comfort Control Design
Simple controls allow guests to customize their settings, while quiet, uniform air movement keeps rooms comfortable.

Smart Self-Check
Provides nine diagnostic points for self-check and correction of fault conditions.

Eco-Friendly
Frigidaire® uses R-410A refrigerant that's not harmful to the earth's ozone layer and meets U.S. Environmental Protection Agency requirements.

Effortless™ Operation
Simple, intuitive room controls are easy for guests to operate — ensuring a relaxing, more comfortable stay. Features like Effortless™ Restart and Ready-Select® controls reduce maintenance calls.

Performance	BTUs
Cool	9,400
Electric Heater	8,300

AHRI CERTIFIED™
www.ahridirectory.org
Packaged Terminal AC
AHRI Standard 310/380

Signature Features

Corrosion Guard

A corrosion-resistant fin coating extends operation life and your investment, plus it is easier to maintain in coastal environments.

Dry Mode

Dry Mode feature will help manage and reduce the humidity content within the living space, making it more comfortable.

Effortless™ Maintenance

With Frigidaire's reputation for durability, easy maintenance, availability of reliable parts and service you can count on, you can be sure that you're getting the highest-quality performance.

SilentDesign™

Sound reduction package.

FRIGIDAIRE

Packaged Terminal Air Conditioner (PTAC)

FFRP092LT5 **Air Conditioner / Electric Heater**

Performance	
BTU (Cool)	9,400
BTU (Electric Heater)	8,300
Dehumidification (Pints / Hour)	2.1
Cool Area (Sq. Ft.)	450
Energy Efficiency Ratio	12.1
Electrical	
Volts	265
Amps (Cool)	3.3
Amps (Electric Heater)	9.3
Watts (Cool)	775
Watts (Electric Heater)	2,450
Cable Included	Yes
Length of Power Cord	2.3′
Circuit Breaker	15A
Plug Type (NEMA)	LCDI (7-15P)
Features	
Fin Coating	Corrosion Guard
Dry Mode	Yes
Electronic Controls	Ready-Select® Controls
Front Desk Control Ready	Yes
Fan Speeds (Dry / Cool / Fan / Heat)	1 / 2 / 2 / 2
Noise Level Indoors (High / Low)	52 / 50
Quiet Start-Up	Yes
Low Voltage Start-Up	Yes
Random Restart Protection	Yes
Effortless™ Auto Freeze Protection	Yes
Energy Save	Yes
24-Hour On / Off Timer	Yes
Air CFM (High / Low)	330 / 294
Air Direction Control	Auxiliary 2-Way
Air Intake	Fresh or Recycled
Filter Type	Nylon Mesh
Filter Access	Slide-Out
Slide-Out Chassis	Yes
Commercial Grade Warranty[1]	Yes
Certifications	
Safety Certification	UL, CUL & CSA
Performance	AHRI & CEC
Specifications	
Refrigerant	R410a
Charge	23.6 oz.
Shipping Weight (Approx.)	137 Lbs.

[1]Warranty 5 year sealed system / 2 year full parts and labor.

Plug Type (NEMA)
7-15P

PTAC Nomenclature

FF	RP	07	2	L	T	3

FRIGIDAIRE

PTAC

CORROSION GUARD

DESIGN YEAR
T = 2017

BTU OUTPUT
07 = 7,200 / 7,000
09 = 9,400 / 9,200
12 = 11,800 / 11,600
15 = 14,500 / 14,200

HEAT
L = Electric
H = Heat Pump

230/208V	265V
2 = 15A	**5** = 15A
3 = 20A	**6** = 20A
4 = 30A	**7** = 30A

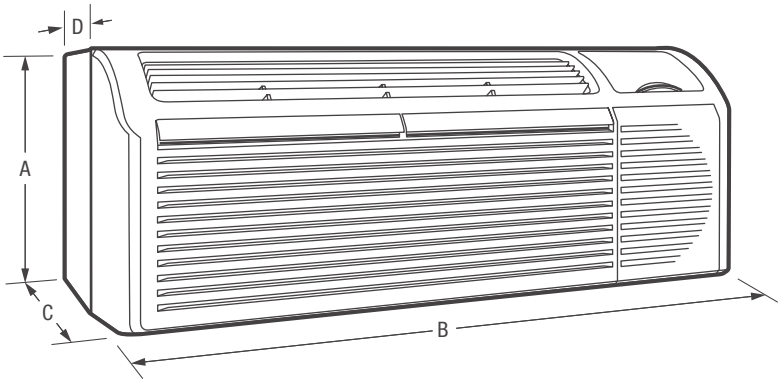

NOTE: For planning purposes only. Always consult local and national electric codes. Refer to Product Installation Guide for detailed installation instructions on the web at frigidaire.com.

AHRI CERTIFIED™ www.ahridirectory.org Packaged Terminal AC AHRI Standard 310/380

Product Dimensions	
A - Height	16″
B - Width	42″
C - Depth (Overall Unit)	21-3/4″
D - Depth (Inside Sleeve)	13-3/4″
Max. Wall Thickness	13-1/2″[2]

[2]Unless the PTAC unit is installed with a wall sleeve.

Wall Cutout Dimensions	
Height	16-1/4″
Width	42-1/4″

*Accessories information available on the web at **frigidaire.com***

FRIGIDAIRE
USA • 10200 David Taylor Drive • Charlotte, NC 28262 • 1-800-FRIGIDAIRE • **frigidaire.com**
CANADA • 5855 Terry Fox Way • Mississauga, ON L5V 3E4 • 1-800-265-8352 • **frigidaire.ca**

Specifications subject to change.

© 2017 Electrolux Home Products, Inc.

FRIGIDAIRE

Packaged Terminal Air Conditioner (PTAC)

FFRP092LT5 **Air Conditioner / Electric Heater**

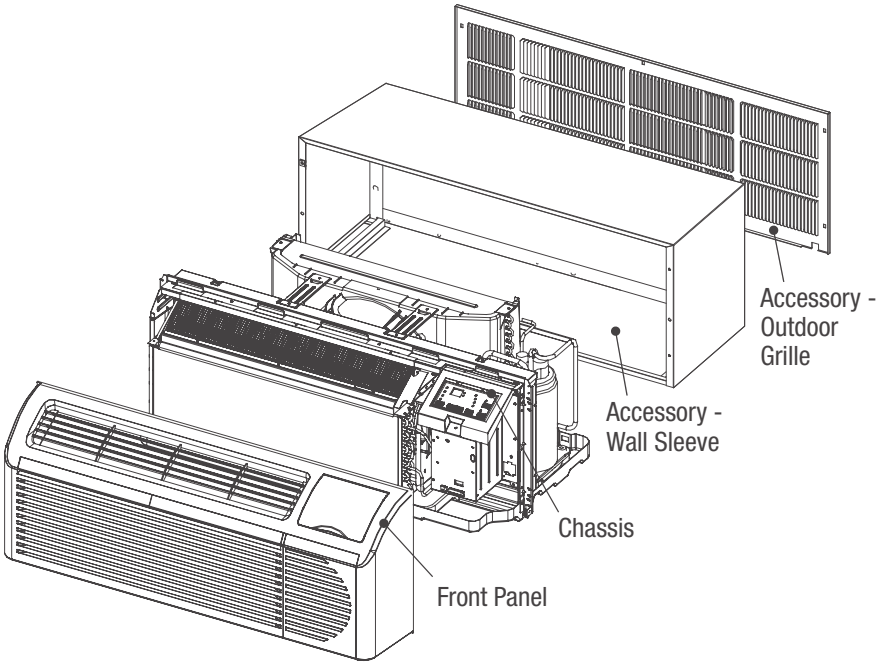

Rearward Slope

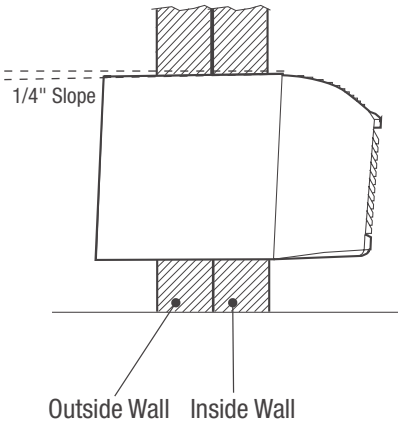

Plug Type (NEMA) 7-15P

Product Dimensions	
Height	16″
Width	42″
Depth (Overall Unit)	21-3/4″
Depth (Inside Sleeve)	13-3/4″
Max. Wall Thickness	13-1/2″

Wall Cutout Dimensions	
Height	16-1/4″
Width	42-1/4″

PTAC Specifications

- Product Shipping Weight (approx.) – 137 Lbs.
- An electrical supply with grounded three-prong receptacle is required. The power supply circuit must be installed in accordance with current edition of National Electrical Code (ANSI/NFPA 70) and local codes & ordinances.
- Voltage Rating – 265V / 60 Hz
- Amps @ 265V Volts = (Cool) 3.3 Amps / (Electric Heater) 9.3 Amps
- Always consult local and national electric codes.
- Recommended Circuit Breaker – 15 Amps
- Unit equipped with 265V 3-wire power supply cord, NEMA plug type 7-15P, approximately 28″ long.
- In order for condensate water to drain properly inside the unit, the sleeve must be installed properly: Level from right to left with a slight 1/4″ rearward pitch from the indoor side to the outdoor side as shown in the illustration above. Refer to the Installation Instructions on the web.
- The drain kit listed on the Frigidaire® PTAC Accessories page can be used for an internal or external drain. This applies to new and replacement installation.

New Installation

- For new installation, Frigidaire® PTAC Sleeves are available and recommended for proper installation. See accessories pages for sleeve options.*
- Standard PTAC installation requires 13-1/2″ maximum wall thickness, unless a wall sleeve is used.
- If the PTAC unit protrudes more than 4″, then it is suggested that it be installed with a subbase. See accessories pages for subbase options.

Replacement Installation

- When replacing existing PTAC with new unit, refer to Product Installation Guide on web to identify existing wall-sleeve manufacturer and size compatibility. If proper installation and slope are suspect, then correct installation of Frigidaire® PTAC Sleeve options recommended.
- For any sleeve retrofit application, be sure that the foam seals (factory-installed on the tube sheets) provide a good seal between the grille and the outdoor coil tube sheets. These foam seals provide a barrier that stops air from the inside mixing with air on the outside (known as air recirculation).
- Using Frigidaire® wall sleeve with Non-Frigidaire grille requires installation of an Accessory Baffle Kit, which ensures a good seal between the unit and exterior grille to prevent air recirculation. Air recirculation is a large contributor to performance loss and premature damage to major components.

Note: For planning purposes only. Refer to Product Installation Guide on the web at frigidaire.com for detailed instructions.

See Frigidaire® PTAC accessories pages attached for optional accessories.

AHRI CERTIFIED™ www.ahridirectory.org Packaged Terminal AC AHRI Standard 310/380

c UL us SA®

FRIGIDAIRE

USA • 10200 David Taylor Drive • Charlotte, NC 28262 • 1-800-FRIGIDAIRE • **frigidaire.com**
CANADA • 5855 Terry Fox Way • Mississauga, ON L5V 3E4 • 1-800-265-8352 • **frigidaire.ca**

Specifications subject to change.

© 2017 Electrolux Home Products, Inc.

Packaged Terminal Air Conditioner (PTAC)

ACCESSORIES

FRIGIDAIRE

Metal Wall Sleeve

Polymer Wall Sleeve

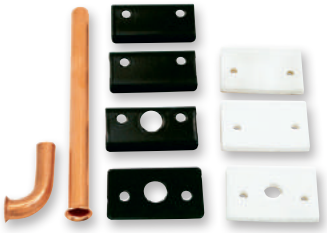

Condensation Universal Drain Kit

Wall Sleeves and Drain Kit

Metal Wall Sleeve & Accessories

5304482701 Steel Sleeve – Insulated
5304483759 16″ Extended Sleeve – Insulated
5308815304 18″ Extended Sleeve – Insulated
5308815305 24″ Extended Sleeve – Insulated
5304483760 3″ Sleeve Adapter

These fully insulated sleeves are made of electro-galvanized steel that resists corrosion, and welded areas are sealed with a rust preventive. White powder coating matches PTAC units. Sliding keyhole grille attachments enable easy, one-person installation from the inside.

Polymer Wall Sleeve

5308815302 Insulated

Utilizes fiberglass-reinforced polyester compound to produce a durable, noncorrosive wall case that provides superior sound absorption, reduces heat loss and prevents sleeve sweating. (Requires use of a Polymer Architectural Grille.)

Condensation Universal Drain Kit

5304480570 1-Pack

Controls condensate from the PTAC unit and can be used for exterior or interior drain systems. Includes 1/2″ O.D. copper drain tubes with a short right angle tube and a 6″ straight tube to suit the application. (Recommended for all new sleeve installations.)

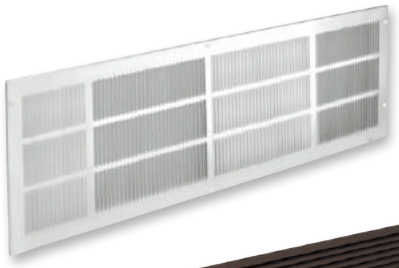

Stamped Aluminum Grille

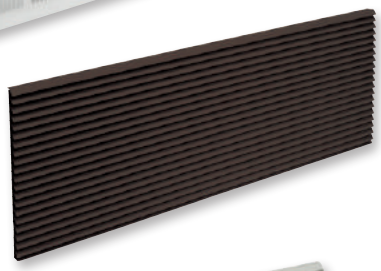

Architectural Aluminum Grille

Polymer Architectural Grille

Outdoor Grilles

Stamped Aluminum Outdoor Grille

5304480557 Clear Anodized Aluminum Finish

Cost-effective, one-piece stamped grille is made from durable anodized aluminum. The grille is lightweight, has a clear finish and is easy to install from inside the room.

Architectural Aluminum Outdoor Grilles

5304480558 Clear Anodized Aluminum Finish
5308815313 Dark Brown
530448055X Customized Color

Enhances the appearance of any building. Made of a durable, anodized aluminum that offers weather resistance. Sliding keyhole attachment enables easy installation onto Frigidaire® metal wall sleeve.

Polymer Architectural Outdoor Grilles

5308815310 Brown
5308815312 Alpine Beige

Blends with most building exteriors. Its durable design offers protection, has an enhanced appearance and provides superior weather resistance. (Requires use of a Polymer Wall Sleeve.)

Packaged Terminal Air Conditioner (PTAC)

ACCESSORIES

FRIGIDAIRE

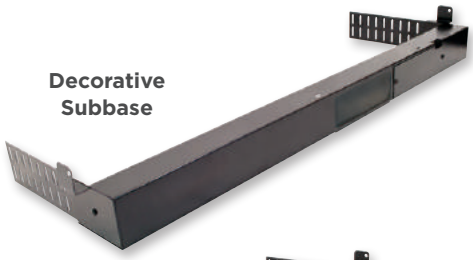

Decorative Subbase

Electrical Subbase

Leveling Legs

Air Filters

Wall Thermostats

FFTSTATWL

5304483050

Lateral Duct Kit

Subbases and Leveling Legs

Decorative Subbase

5308815315 Black

Made of heavy-gauge steel to provide support for the wall sleeve, the subbase mounts directly to the wall sleeve and has adjustable leveling legs.

Black Electrical Subbases

5304482886 230V/15A
5304482891 265V/30A
5304482888 230V/30A
5304482890 265V/20A
5304482887 230V/20A

5304482698
265V Subbase Disconnect Switch
5304490211
Hardwire Kit, Conduit and Plate
(For 230V and 265V)

Offers the same features as the decorative subbase, plus a factory-installed electrical junction box containing a receptacle for corded PTAC units.

Leveling Legs

5304480575

Attach easily to the wall sleeve and offer accurate leveling and support for units without a subbase. Adjustable from 3-1/4″ to 5-1/2″.

Air Filters

Air Filters

5304482892 10-Pack

Changing filters periodically ensures a healthy room environment, proper airflow, temperature control and energy efficiency.

Wall Thermostats

Wireless Digital Wall Thermostat

FFTSTATWL Non-Programmable (Includes Wireless Receiver)

Allows control without having to worry about wiring. Easy to install and use. Large intuitive LCD screen improves user interaction.

Wired Digital Wall Thermostats

5304482700 Programmable
5304483050 Non-Programmable

Offers auto-changeover, 2-stage heating and cooling, as well as emergency heating mode for heat pump.

Laminated Insert

FPTAC0511

Informs guests that unit is controlled by wall thermostat.

Miscellaneous

Lateral Duct Kit

5304490206

Allows one PTAC unit to heat or cool two rooms. Kit mounts to wall sleeve and can be installed for either right- or left-side duct applications.

Baffle Kit

5304484585

Baffle Kit for use on non-standard grilles.